USN	1	R	V			E	C			

RV College of Engineering®
Mysore Road, RV Vidyaniketan Post,
Bengaluru - 560059, Karnataka, India

NBA Accredited (UG - 6 Years)

Department of Electronics & Communication Engineering

Date: 3/12/2024	**Test 2**	**Max. Marks:50**
Semester: III	**UG**	**Duration: $1\frac{1}{2}$ Hrs**
Course: Analysis and Design of Digital Circuit with HDL		**Code: EC234AI**

Part B				
Sl. No.	Questions	M	BT	CO
1a.	Differentiate between blocking and non-blocking assignment statements. Consider the following statements. (a) RegA = 75; RegB =RegA; (b) RegA <= 75; RegB <= RegA: Assuming that RegA contains the value of 30 initially: What are the values of RegA and RegB after execution?	4	2	2
1b.	Design MOD 6 Synchronous Down counter using JK Flip Flops. Write the output waveforms for the same.	6	3	3
2a.	A PN flip-flop has four operations: clear, no change, complement, and set to 1, when inputs P and N are 00, 01, 10, and 11, respectively. a) Tabulate the characteristic table. b) Derive the characteristic equation. c) Tabulate the excitation table. d) Show how the PN flip-flop can be converted to a D flip-flop.	6	4	3
2b.	A binary ripple counter must be capable of counting up to 16,383. 1.) How many flip flop are required? 2.) If the clock frequency is 8,192 MHz, what if the frequency at the output of the most significant stage ? 3.) At what stage of the counter is the frequency of the waveform equal to 8kHz?	4	3	2
3.	Using JK flip flops, design a synchronous counter for the following count sequence: 4-6-7-3-1--→4-6……. (Avoid Lock out condition). Write behavioural modelling Verilog code for the same.	10	3	3
4.	What is functionality of master-slave JK flip flop? Write the Verilog code for the same. Draw the output timing diagram for master output and slave output for the signal shown in Fig 4.	10	2	2
5.	A sequential circuit with two D Flip-Flops, A and B; two inputs, x and y; and one output, z, is specified by the following next-state and output equations: A(t+1) = x′y + xA B(t+1) = x′B + xA z = B a) Draw the logic diagram of the circuit. b) List the state table for the sequential circuit. c) Draw the corresponding state diagram.	10	4	4

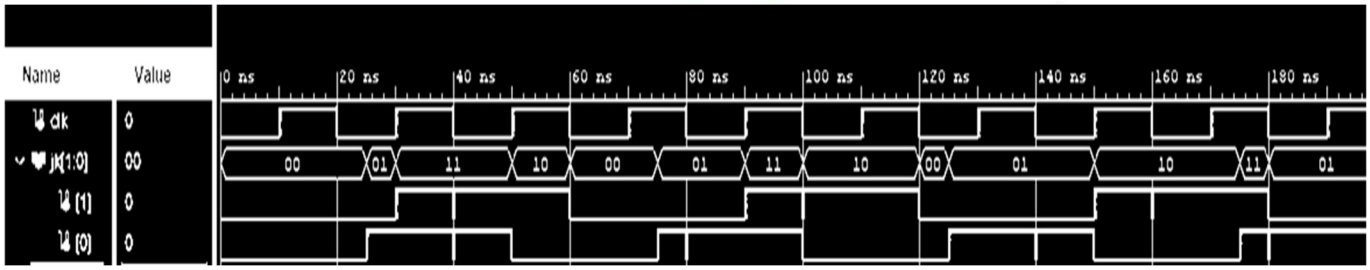

Fig 4

Marks Distribution	Particulars		CO1	CO2	CO3	CO4	L1	L2	L3	L4	L5	L6
	Test	Max Marks	0	18	22	10	-	14	20	16	-	-

Q No	Solutions	M
1a)	*Table 1-3.* Differences between blocking and nonblocking assignments **Blocking assignments** / **Nonblocking assignments** In a blocking assignment, the evaluation of the expression on the RHS is updated to the LHS variable autonomously based on the delay value (either 0 if no delay specified, or scheduled as a future event if a non-0 value is specified) / Nonblocking assignment to LHS is *scheduled* to occur when the next evaluation cycle occurs in simulation and not immediately. Updates are not available immediately within the same time unit When multiple blocking assignments are present in a process, the trailing assignments are blocked from occurring until the current assignment is completed / Multiple nonblocking assignments can be scheduled to occur concurrently on the next evaluation cycle in simulation There is a possibility of race conditions on the variables of blocking assignments if assignments happen to it from two processes concurrently / The race conditions are avoided as the updated value is assigned after evaluation Recommended to use within combinatorial **always** blocks / Recommended to use within the sequential **always** blocks Can be used in procedural assignments like ***initial***, ***always*** and continuous assignments to nets like ***assign*** statements / Can be used only in the procedural blocks like ***initial*** and ***always***; Continuous assignment to nets like the ***assign*** statement is not permitted Represented by "=" operator sign between LHS and RHS / Represented by "<=" operator sign between LHS and RHS RegA = 75; RegB =75 RegA = 75; RegB =30	
1b)	Sequential Design Procedure---2 Marks K map and Boolean equations—2 Marks Logic Diagram --- 2 Marks	
2a)	a) P / N / Q(t+1) 0 / 0 / 0 0 / 1 / Q(t) 1 / 0 / Q′(t) 1 / 1 / 1	

b)

P	N	Q(t)	Q(t+1)
0	0	0	0
0	0	1	0
0	1	0	0
0	1	1	1
1	0	0	1
1	0	1	0
1	1	0	1
1	1	1	1

N

P\NQ	00	01	11	10
0	0	0	1	0
1	1	0	1	1

P

$Q(t+1) = PQ' + NQ$

c)

d) By connecting P and N together.

$Q(t+1) = DQ' + DQ = D$

2b) Number of Flip-Flops Required: To count up to 16,383, you would need at least 15 flip-flops. This is because 15 flip-flops can represent all the binary numbers from 0 to 16,383 (2^14 - 1).
Frequency at the Output of the Most Significant Stage: Given a clock frequency of 8,192 MHz and a 15-bit counter, the frequency at the output of the most significant stage can be calculated using the formula:
Output Frequency = Clock Frequency / 2^(Number of Stages - 1)
Substituting the values:

Output Frequency = 8192 MHz / 2^14 = 0.5 MHz
Stage with Frequency Equal to 8kHz: To find the stage at which the frequency of the waveform is equal to 8kHz, we can use the formula:
Output Frequency = Clock Frequency / 2^N
Solving for N:

N = log2(Clock Frequency / Output Frequency)
N = log2(8192 MHz / 8 kHz) ≈ 10

This means that at the 10th stage of the counter, the frequency of the waveform would be equal to 8kHz.

3

Present state			Next state			Flip-Flop inputs		
Q_2	Q_1	Q_0	Q_2	Q_1	Q_0	J_2K_2	J_1K_1	J_0K_0
0	0	0	0	0	1	0X	0X	1X
0	0	1	1	0	0	1X	0X	X1
0	1	0	0	1	1	0X	X0	1X
0	1	1	0	0	1	0X	X1	X0
1	0	0	1	1	0	X0	1X	0X
1	0	1	1	1	0	X0	1X	X1
1	1	0	1	1	1	X0	X0	1X
1	1	1	0	1	1	X1	X0	X0

Use Karnaugh maps to identify the present state logic functions for each of the inputs.

For J_2,

Q_2 \ Q_1Q_0	00	01	11	10
0	0	1	0	0
1	X	X	X	X

$J_2=Q_1'Q_0$ K2=Q1Q0 J1=Q2 K1=Q2'Q0 J0=Q2'+Q1 K0=Q1'

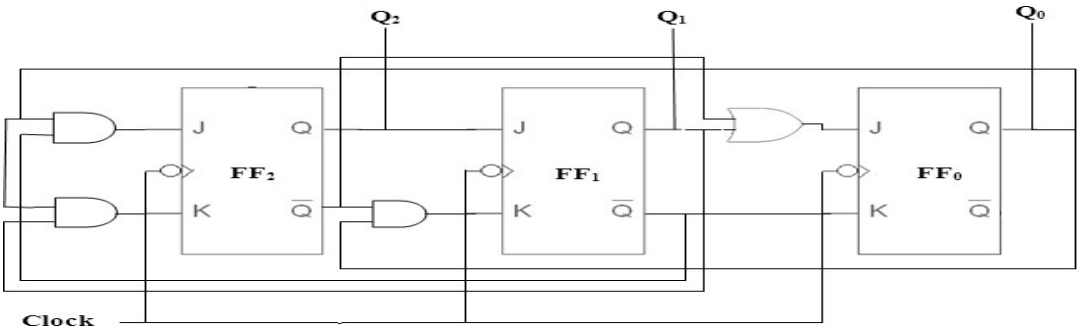

4

Functionality :----- 2 Marks
A master-slave JK flip-flop is a digital circuit that stores one bit of data and solves the race around condition in JK flip-flops.
Master flip-flop: This flip-flop is sensitive to the rising edge of the clock signal, and reads the inputs and stores the data temporarily.
Slave flip-flop: This flip-flop is sensitive to the falling edge of the clock signal, and reads the data stored in the master flip-flop and retains it until the next clock cycle.
Solves race around condition:
The master-slave JK flip-flop ensures that the output remains stable and free from glitches by preventing unintended toggling
Verilog Code: 4 Marks
Waveform Output: ---4 Marks

5

a)

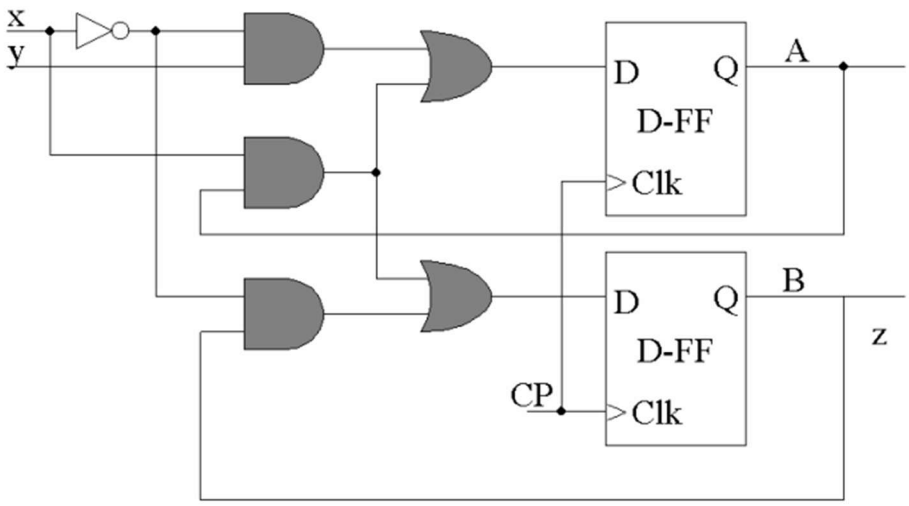

b)

Present State		Inputs		Next State		Output
A	B	x	y	A	B	z
0	0	0	0	0	0	0
0	0	0	1	1	0	0
0	0	1	0	0	0	0
0	0	1	1	0	0	0
0	1	0	0	0	1	1
0	1	0	1	1	1	1
0	1	1	0	0	0	1
0	1	1	1	0	0	1
1	0	0	0	0	0	0
1	0	0	1	1	0	0
1	0	1	0	1	1	0
1	0	1	1	1	1	0
1	1	0	0	0	1	1
1	1	0	1	1	1	1
1	1	1	0	1	1	1
1	1	1	1	1	1	1

c)

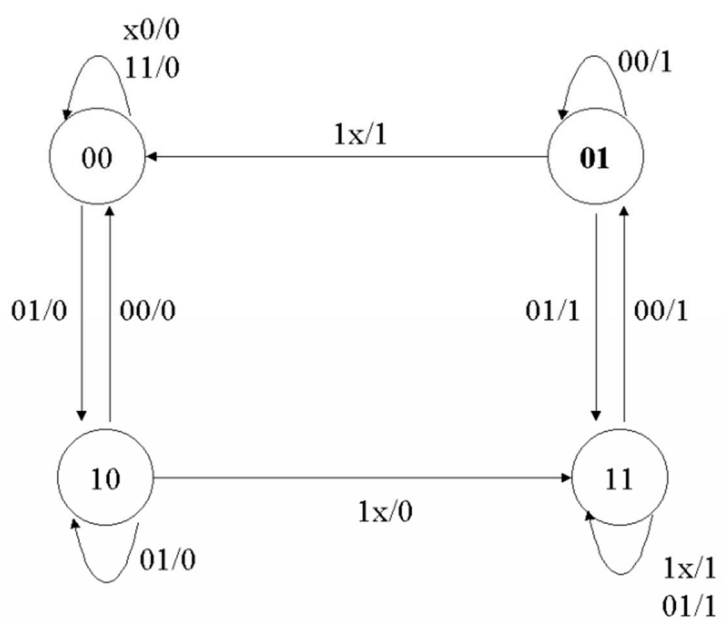

Answers:

1. Z = XA+X'B, B+ = A'B'X' + AB'X+XB

2. 11, 1

3. a=1, b=0

4. X=0, Y=1

5. 111111

6. casex

7. initial
```
    clk=1'b1;
always
begin
#7 clk=1'b0;
#3 clk=1'b1;
end
```